LRN International A levels: Physics (6328)

Candidate Name	
Candidate Number	
Centre Name	
Centre Number	

Paper 2: Physics For Examination June 2023

(2 hours)

It is necessary to respond on the answer sheets provided alongside this question paper. Additionally, you must have a soft pencil (preferably of type B or HB),a clean eraser and a dark blue or black pen.

INSTRUCTIONS:

- You must write your name, candidate number, centre name and centre number on the answer sheets in the designated spaces.
- Objective section consists of 40 questions, and it is essential that you attempt all of them.
- Each question has four options labelled A, B, C, and D. Select the option that you think is correct. Mark it on the multiple choice answer sheet using a soft pencil.
- Attempt all the questions from subjective section using a dark blue or black pen.
- It is important to follow the instructions provided on the answer sheets.
- Do not use correction fluid.
- Avoid writing on any bar codes.
- You are allowed to use a calculator if needed.

INFORMATION:

- This paper has a total of 85 marks.
- In objective section there are 25 questions, each carries one mark. There is no negative marking for incorrect responses.
- In subjective section, 30 marks are for extended theory and 15 marks for practical component.
- The number of marks assigned for every question or its parts is indicated within brackets [ ]

Section A: Multiple Choice

1 What could **not** be a measurement of a physical quantity?

A 10 K **B** 11 J N^{-1} m^{-1} **C** 17 Pa m^3 N^{-1} **D** 25 T m

2 A computer memory stick is labelled as having a storage capacity of 128 GB. The letter B stands for byte, which is a unit.

What is the equivalent storage capacity?

A 1.28□□ 10^8 B **B** 1.28□□ 10^{11} B **C** 1.28□□ 10^{14} B **D** 1.28□□ 10^{17} B

3 A man of mass 75.2 kg uses a set of weighing scales to measure his mass three times. He obtains the following readings.

	mass / kg
reading 1	80.2
reading 2	80.1
reading 3	80.2

Which statement describes the precision and accuracy of the weighing scales?

A. not precise to□□ 0.1 kg and accurate to□□ 0.1 kg

B. not precise to□□ 0.1 kg and not accurate to□□ 0.1 kg

C. precise to□□ 0.1 kg and accurate to□□ 0.1 kg

D. precise to□□ 0.1 kg and not accurate to□□ 0.1 kg

4 Which statement about scalar and vector quantities is correct?

A. A scalar quantity has direction but not magnitude.

B. A scalar quantity has magnitude but not direction.

C. A vector quantity has direction but not magnitude.

D. A vector quantity has magnitude but not direction.

5 How can the acceleration of an object be determined?

A from the area under a displacement–time graph

B from the area under a velocity–time graph

C from the gradient of a displacement–time graph

D from the gradient of a velocity–time graph

6 A sprinter takes a time of 11.0 s to run a 100 m race. She first accelerates uniformly from rest, reaching a speed of 10 m s^{-1}. She then runs at a constant speed of 10 m s^{-1} until the finish line.

What is the uniform acceleration of the sprinter for the first part of the race?

A 0.5 m s^{-2} **B** 0.91 m s^{-2} **C** 1.7 m s^{-2} **D** 5.0 m s^{-2}

7 A single horizontal force *F* is applied to a block X which is in contact with a separate block Y, as shown.

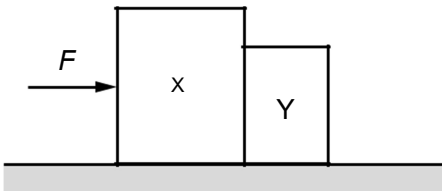

The blocks remain in contact as they accelerate along a horizontal frictionless surface. Air resistance is negligible. X has a greater mass than Y.

Which statement is correct?

A The acceleration of X is equal to force *F* divided by the mass of X.

B The force that X exerts on Y is equal to *F*.

C The force that X exerts on Y is less than *F*.

D The force that X exerts on Y is less than the force that Y exerts on X.

8 A car of mass 750 kg has a horizontal driving force of 2.0 kN acting on it. It has a forward horizontal acceleration of 2.0 m s^{-2}.

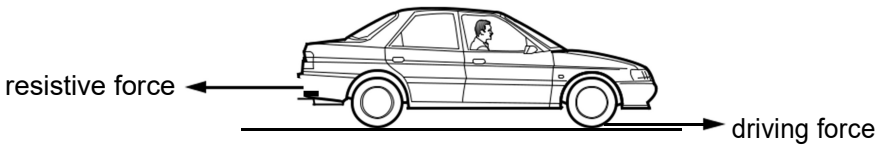

What is the resistive force acting horizontally?

A 0.50 kN **B** 1.5 kN **C** 2.0 kN **D** 3.5 kN

9 An object falls freely from rest in a vacuum. The graph shows the variation with time t of the velocity v of the object.

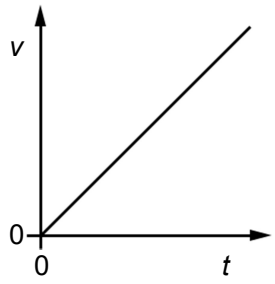

Which graph, **using the same scales**, represents the object falling in air?

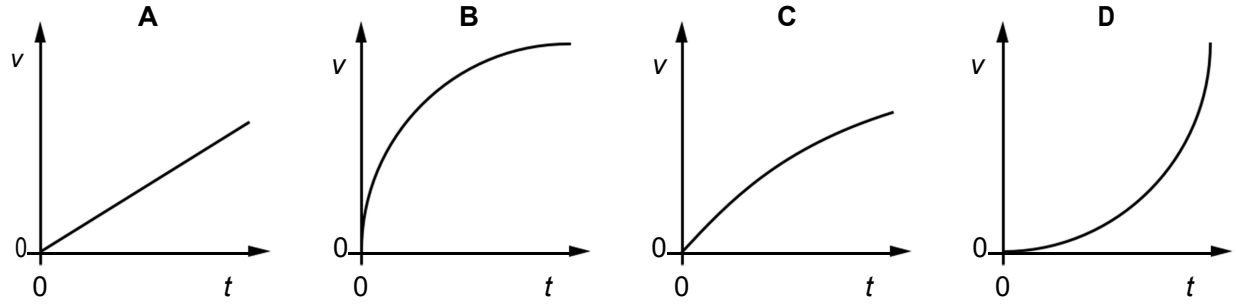

10 A rock of mass $2m$, travelling in deep space at velocity v, explodes into two parts of equal mass, one of which is then stationary.

What is the kinetic energy of the moving part after the explosion?

A $\frac{1}{2}mv^2$ **B** mv^2 **C** $\frac{3}{2}mv^2$ **D** $2mv^2$

11 A horizontal metal bar PQ of length 50.0 cm is hinged at end P. The diagram shows the metal bar viewed from above.

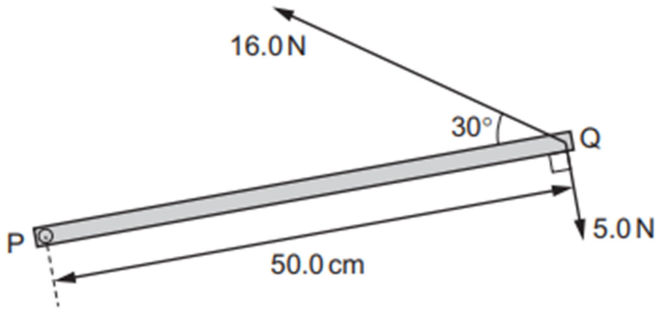

Two forces of 16.0 N and 5.0 N are in the horizontal plane and act on end Q, as shown.

What is the resultant moment about P due to the two forces?

A 1.5 N m **B** 4.4 N m **C** 6.5 N m **D** 9.4 N m

12 A cube WXZY has sides of length 2.0 cm and mass 24.0 g. The cube rests on a metre rule of negligible mass. The geometrical centre of the cube is vertically above the 70.0 cm mark on the scale of the rule.

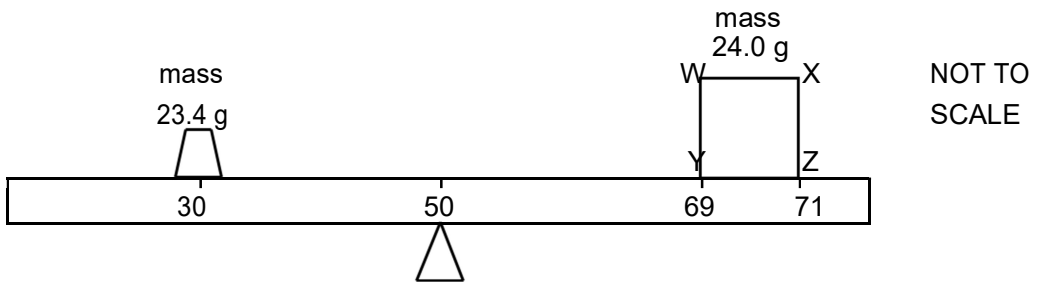

The cube has a non-uniform density so that its centre of gravity is **not** at its geometrical centre. The centre of gravity of the cube is in the plane of the diagram.

The rule rests on a pivot at the 50.0 cm mark. A mass of 23.4 g is placed vertically above the 30.0 cm mark. The rule is horizontal and in equilibrium.

What can be determined about the position of the centre of gravity of the cube?

A It must be somewhere along a horizontal line that is 0.5 cm from line WX.

B It must be somewhere along a horizontal line that is 0.5 cm from line YZ.

C It must be somewhere along a vertical line that is 0.5 cm from line WY.

D It must be somewhere along a vertical line that is 0.5 cm from line XZ.

13 A rigid sphere is held at rest on the sea bed. When the sphere is released, it rises to the surface of the sea. The seawater has a uniform density.

Which statement about the sphere, from its release until it reaches the surface, is correct?

A The sphere always moves with constant acceleration.

B The sphere always moves with constant velocity.

C The upthrust on the sphere always decreases.

D The upthrust on the sphere is always constant.

14 What is a unit for density?

A N m^{-3} **B** g mm^{-1} **C** kg cm^{-2} **D** □g mm^{-3}

15 The unit of resistance is the ohm.

Which of the following is equivalent to the ohm?

A $JC^{-2}\,s$
B $JC^{-2}\,s^{-1}$
C $JC^{-1}\,s^{-1}$
D JCs

16 A light dependent resistor (LDR) and a fixed resister are connected in a circuit, as shown.

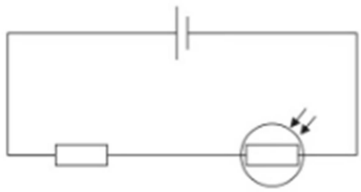

The intensity of the light incident on the LDR is increased.

Which of the following does not take place as the light intensity is increased?

A The current in the circuit increases.
B The potential difference across the fixed resistor increases.
C The total power dissipated in the circuit decreases.
D The resistance of the LDR decreases.

17 The graph shows how current I varies with potential difference V for an electrical component.

Which component is represented by this graph?

A Diode
B Filament Lamp
C Ohmic Conductor
D Thermistor

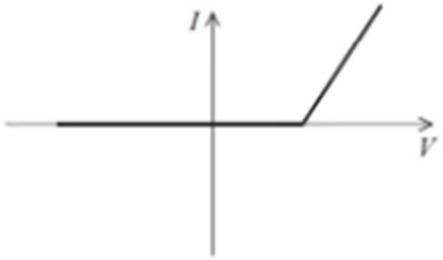

18 A metal wire is stretched. The wire obeys Hooke's law. Which quantity has a value that does **not** change?

A extension

B strain

C stress

D Young modulus

19 An object is stretched until it reaches the elastic limit.

Which statement must describe the stress on the object when it is at the elastic limit?

A It is the maximum stress for which the object obeys Hooke's law.

B It is the maximum stress that can be applied to the object before it has elastic deformation.

C It is the maximum stress that can be applied to the object before it has plastic deformation.

D It is the maximum stress the object can withstand before it breaks.

20 All external forces on a body cancel out.

Which statement must be correct?

A the body does not move

B the total energy (kinetic and potential) of the body remains unchanged

C the speed of the body remains unchanged

D the momentum of the body remains unchanged

21 A stone of mass ***m*** is dropped from a tall building. There is significant air resistance. The acceleration of free fall is ***g.***

When the stone reaches its terminal velocity, which information is correct?

	Magnitude of the acceleration of the stone	Magnitude of the force of gravity on the stone	Magnitude of the force of air resistance on the stone
A	zero	***mg***	***mg***
B	***g***	***mg***	***mg***
C	***g***	zero	zero
D	zero	zero	zero

22 A ball falls vertically and bounces on the ground.

The following statements are about the forces acting while the ball is in contact with the ground.

Which statement is correct?

A the force that the ball exerts on the ground is always equal to the weight of the ball

B the force that the ball exerts on the ground is always less than the weight of the ball

C the force that the ball exerts on the ground is always equal in magnitude and opposite in direction to the force the ground exerts on the ball

D the weight of the ball is always equal in magnitude and opposite in direction to the force that the ground exerts on the ball

23 A box of mass 10.0 kg rests on a horizontal rough surface. A string attached to the box passes over a smooth pulley and supports a 4.0 kg mass at its other end.

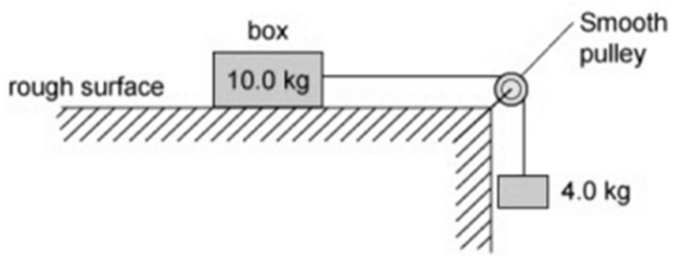

When the box is released, a frictional force of 12.0 N acts on it.

What is the acceleration of the box?

A 1.2 m s^{-2}

B 1.9 m s^{-2}

C 2.7 m s^{-2}

D 3.0 m s^{-2}

24 A lift consists of a passenger car supported by a cable which runs over a light, frictionless pulley to a balancing weight. The balancing weight falls as the passenger car rises.

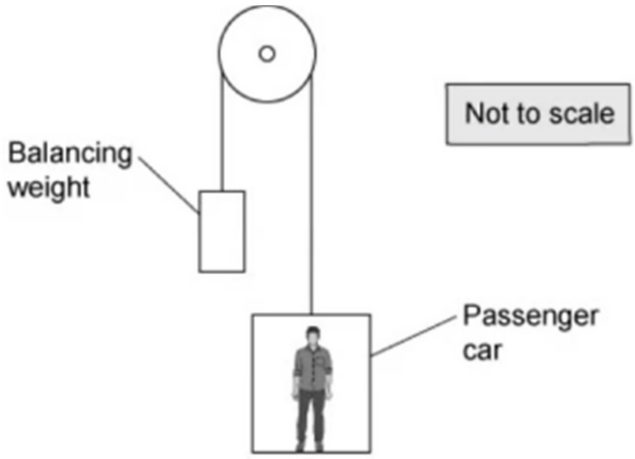

Some masses are shown in the table below.

	Mass/kg
Passenger car	1200
Balancing weight	1320
Passenger	80

What is the magnitude of the acceleration of the car when carrying just one passenger and when the pulley is free to rotate?

A 0.15 m s^{-2}

B 0.30 m s^{-2}

C 0.45 m s^{-2}

D 0.92 m s^{-2}

25 A 3.2 kg mass is supported by a person's hand and two newton-meters as shown.

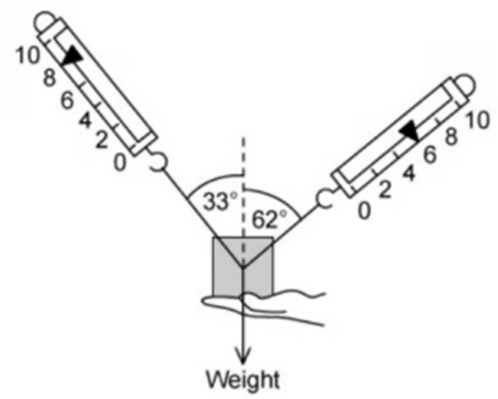

When the person's hand is removed, what is the initial vertical acceleration of the mass?

A 3.0 m s^{-2}

B 5.4 m s^{-2}

C 6.8 m s^{-2}

D 12.8 m s^{-2}

26 A ship of mass 6.7 x 10^7 kg is approaching a harbour with speed 18.9 m s^{-1}. By using reverse thrust it can maintain a constant total stopping force of 880, 000N.

How long will it take to stop?

A 14 seconds
B 140 seconds
C 24 minutes
D 240 minutes

27 The graph of velocity against time for an object moving in a straight line is shown

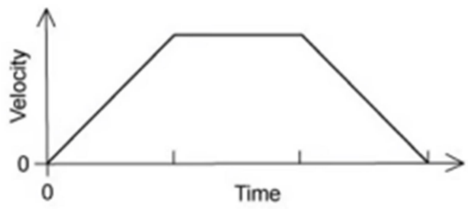

What is the corresponding graph of displacement against time?

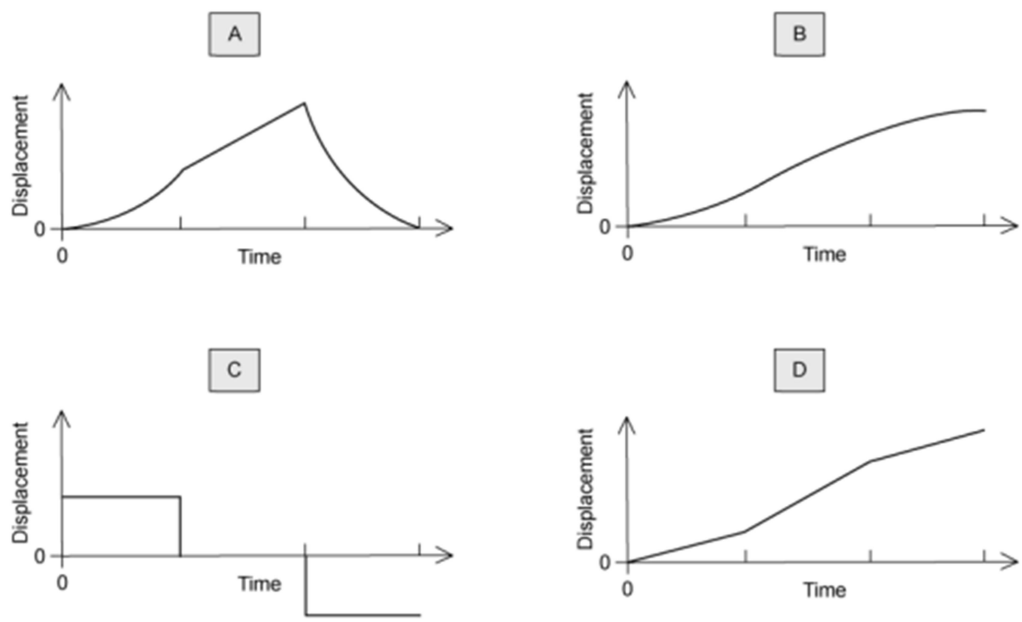

28 The isotope $^{222}_{96}Rn$ decays in a sequence of emissions to form the isotope $^{206}_{82}Pb$. It will either emit an α-particle or a β-particle at each stage of the decay sequence. What is the number of stages in the decay sequence?

A 20

B 16

C 8

D 4

29 For a current-carrying wire, the current can be calculated using the equation shown.

$$I = Anvq$$

What is the meaning of *n*?

A the number of charge carriers in the wire

B the number of charge carriers multiplied by the volume of the wire

C the number of charge carriers per unit length of the wire

D the number of charge carriers per unit volume of the wire

30 The number of free electrons passing a point in a wire in 24 hours is 6.0×10^{23}.

What is the average current in the wire?

A 6.3 pA **B** 1.1 A **C** 67 A **D** 4.0 kA

31 In the circuit shown, lamp P is rated 250 V, 50 W and lamp Q is rated 250 V, 200 W. The two lamps are connected in series to a 250 V power supply.

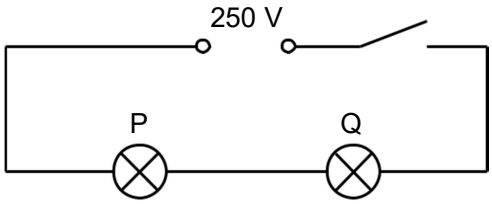

Assume that the resistance of each lamp remains constant.

Which statement most accurately describes what happens when the switch is closed?

A Lamp P emits four times as much power as lamp Q.

B Lamp P emits twice as much power as lamp Q.

C Lamp Q emits four times as much power as lamp P.

D Lamp Q emits twice as much power as lamp P.

32 A piece of wire has a length of 0.80 m and a diameter of 5.0×10^{-4} m. The *I*–*V* characteristic of the wire is shown.

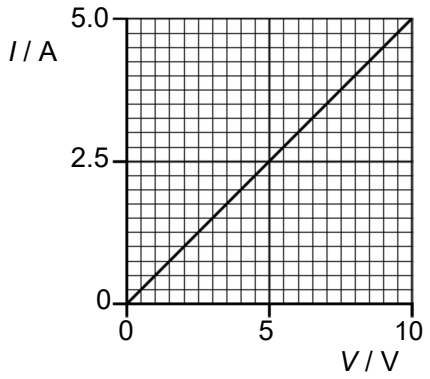

What is the resistivity of the metal from which the wire is made?

A 1.2×10^{-7} m

B 1.6×10^{-7} m

C 4.9×10^{-7} m

D 2.0×10^{-6} m

33 Ten cells, each of electromotive force (e.m.f.) 1.5 V, are connected together, as shown.

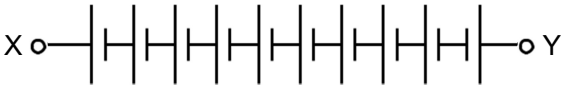

What is the combined e.m.f. between terminals X and Y?

A 8V **B** 9V **C** 12V D 15 V

34 A cell of electromotive force (e.m.f.) E and internal resistance r is connected to a variable resistor, as shown.

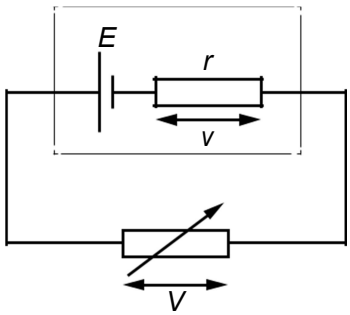

The resistance of the variable resistor is gradually increased from r to $3r$.

Which graph shows the variation of the potential difference (p.d.) v across the internal resistance with the p.d. V across the variable resistor?

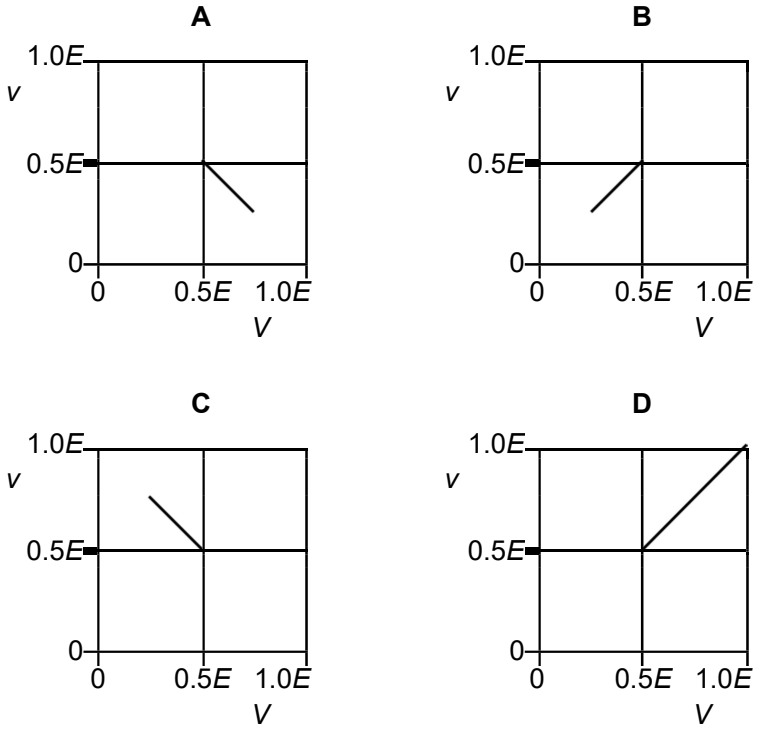

35 Each of Kirchhoff's two laws presumes that some quantity is conserved.

Which row states Kirchhoff's **first** law and names the quantity that is conserved?

	statement	quantity
A	the algebraic sum of currents into a junction is zero	charge
B	the algebraic sum of currents into a junction is zero	energy
C	the e.m.f. in a loop is equal to the algebraic sum of the product of current and resistance round the loop	charge
D	the e.m.f. in a loop is equal to the algebraic sum of the product of current and resistance round the loop	energy

36 A cell has an electromotive force (e.m.f.) of 8.0 V and negligible internal resistance. The cell forms part of a circuit, as shown.

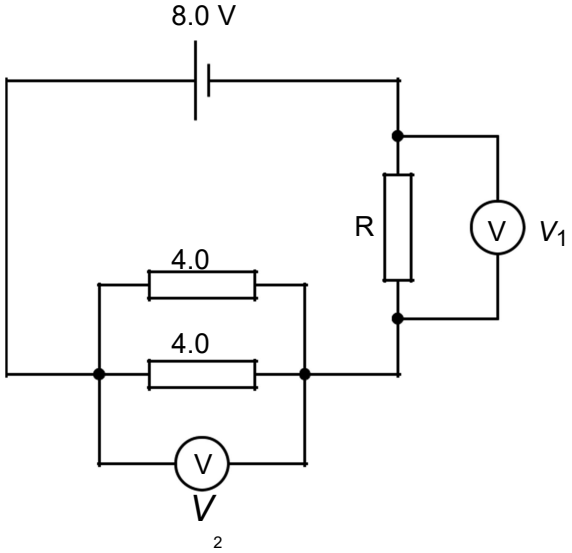

The reading V_1 is 4.0 V and the reading V_2 is also 4.0 V.

What is the resistance of resistor R?

A 0.50 Ω **B** 2.0 Ω **C** 4.0 Ω **D** 8.0 Ω

37 In the circuit shown, the cells have negligible internal resistance and the reading on the galvanometer is zero.

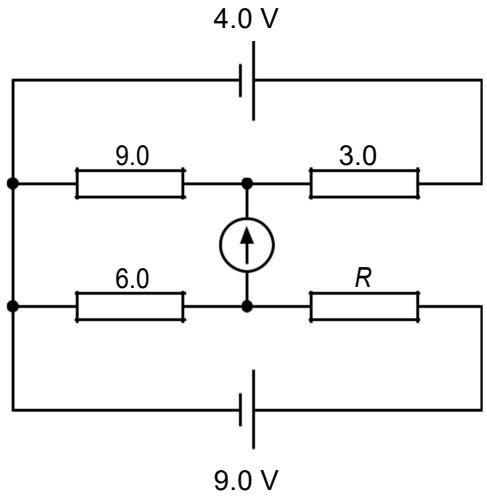

What is the value of resistor R ?

A 2.0 Ω **B** 6.0 Ω **C** 12 Ω **D** 18 Ω

38 When α-particles are directed at gold leaf:

1 almost all α-particles pass through without deflection

2 a few α-particles are deviated through large angles

What are the reasons for these effects?

	1	2
A	Most α-particles have enough energy to pass right through the gold leaf	Gold is very dense so a few low energy α-particles can bounce back from the gold surface
B	Most α-particles miss all gold atoms	A few α-particles bounce off gold atoms
C	The gold nucleus is very small so most α-particles miss all nuclei	Occasionally the path of an α-particle is close to a nucleus
D	The positive charge in an atom is not concentrated enough to deflect an α-particle	Occasionally an α-particle experiences many small deflections in the same direction

39 A nucleus X is radioactive and decays into a nucleus Y. X and Y are isotopes of the same element.

Which combination of particles could have been emitted during the decay process?

A 1□□-particle and 1□□$^{-}$ particle

B 1□□-particle and 2□□$^{-}$ particles

C 2□□-particles and 1□□$^{-}$ particle

D 2□□-particles and 2□□$^{-}$ particles

40 Antimatter is a particle that is an antiparticle to the corresponding particle. A positron is the antiparticle of an electron. What is the difference between a positron and an electron?

A Mass

B Magnitude of charge

C Charge

D Spin

End of Section A

Section B (Short and Long Answer):

Question 1

(a) State the class of particles which includes protons and neutrons.

..... [1]

(b) A proton inside a nucleus decays into a neutron. Write an equation to represent this decay.

[2]

(c) State the composition of a proton in terms of quarks.

..... [1]

(d) Describe the decay of the proton in **(b)** in terms of quarks.

..... [1]

[Total: 5 marks]

Question 2

i) State Newton's second law of motion.

.....

.....

[1 mark]

ii) A toy rocket consists of a container of water and compressed air (shown below)

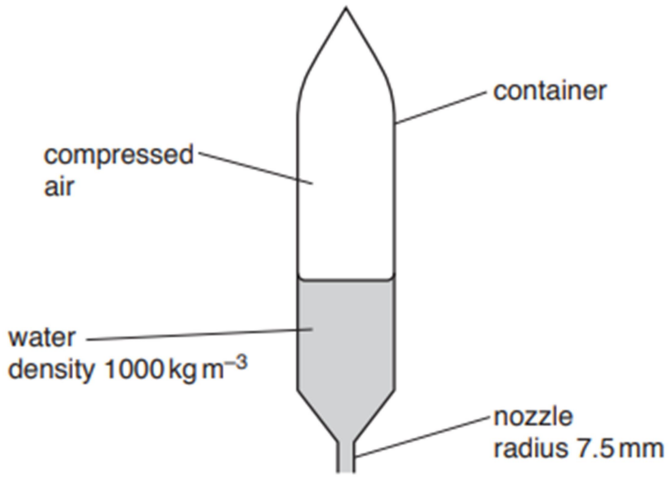

Water is pushed vertically downwards through a nozzle by the compressed air. The rocket moves vertically upwards.

The nozzle has a circular cross-section of radius 7.5 mm. The density of the water is 1000 kg m^{-3}. Assume that the water leaving the nozzle has the shape of a cylinder of radius 7.5 mm and has a constant speed of 13 ms^{-1} relative to the rocket.

i) Show that the mass of water leaving the nozzle in the first 0.20 s after the rocket launch is 0.46 kg.

[2 marks]

ii) Calculate

1. The change in the momentum of the mass of water in b) (i) due to leaving the nozzle,

Change in momentum = N s

2. The force exerted on this mass of water by the rocket.

Force = …… N

[3 marks]

(iii) State and explain how Newton's third law applies to the movement of the rocket by the water.

…….....

…….....

…….....

…….....

[2 marks]

(iv) The container has a mass of 0.40 kg. The initial mass of water before the rocket is launched is 0.70 kg. The mass of the compressed air in the rocket is negligible. Assume that the resistive force on the rocket due to its motion is negligible.

For the rocket at a time of 0.20 s after launching,

1. Show that its total mass is 0.64 kg,

2. Calculate its acceleration.

Acceleration = …….. m s^{-2}

[3 marks]

[Total: 11 marks]

Question 3

(a) A proton in a nucleus decays to form a neutron and a β^+ particle.

(i) State the name of another lepton that is produced in the decay.

……

[1 mark]

ii) State the name of the interaction (force) that gives rise to this decay.

……

[1 mark]

iii) State which of the three particles (proton, neutron or β^+ particle) has the largest ratio of charge to mass and give a reason why. .

……

……

……

……

[2 marks]

[Total: 4 marks]

Question 4

Figure 2 shows a 12 V power supply with negligible internal resistance connected to a uniform metal wire AB. The wire has length 1.00 m and resistance 10 Ω. Two resistors of resistance 4.0 Ω and 2.0 Ω are connected in series across the wire.

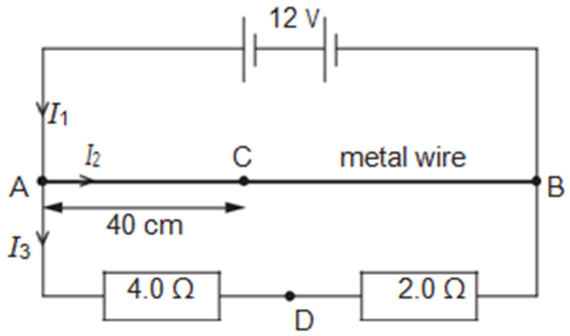

Figure 2

Currents I_1, I_2 and I_3 in the circuit are as shown in Figure 2.

a) (i) Use Kirchhoff's first law to state a relationship between I_1, I_2 and I_3.

..... [1]

(ii) Calculate I_1.

I_1 = ... A [3]

(iii) Calculate the ratio x, where

$$x = \frac{\text{power in metal wire}}{\text{power in series resistors}}.$$

x = ... [3]

i) Calculate the potential difference (p.d.) between the points C and D, as shown in Figure 2. The distance AC is 40 cm and D is the point between the two series resistors.

V

p.d. = ... [3]

[Total: 10 marks]

Section C – Practical Skills (15 marks)

A group of students are investigating the bending of a loaded wooden strip. The figure (Figure 1) below shows a rectangular strip of width b and thickness t overhanging the edge of a bench. A length L of the strip is unsupported.

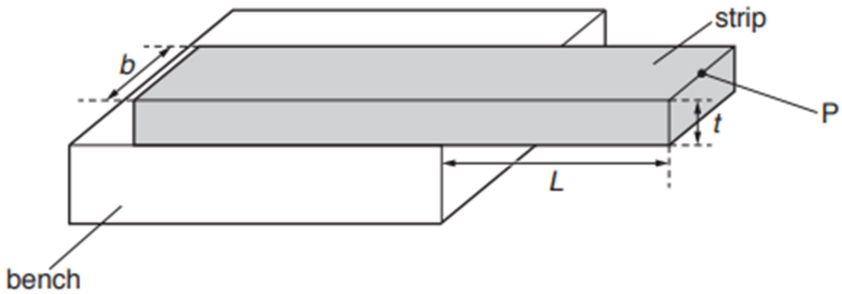

Figure 1

A load of mass M is positioned at point P. This causes the unsupported part of the strip to bend with a deflection s, as shown in Figure 2.

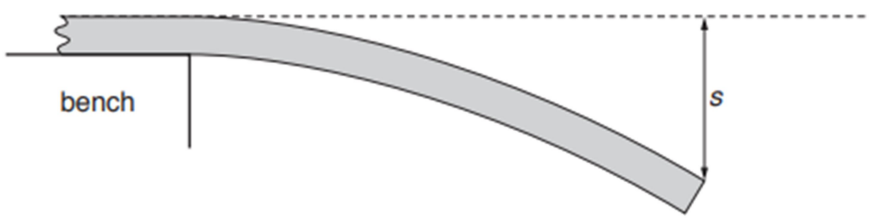

Figure 2

It is suggested that the relationship between s and L is

$$E = \frac{4MgL^3}{bst^3}$$

Where *g* is the acceleration of free fall and *E* is the Young modulus of the wood.

Design a laboratory experiment to test the relationship between s and L. Explain how your results could be used to determine a value for E.

You should include a diagram (on the following page), showing the arrangement of your equipment. In your explanation, you should pay particular attention to:

- The procedure to be followed
- The measurements to be taken
- The control of variables
- The analysis of the data
- Any safety precautions to be taken

[15 marks]

Diagram

.....

.....

.....

.....

.....

.....

.....

.....

.....

.....

.....

.....

.....

.....

.....

.....

[Total: 15]

Data

acceleration of free fall	$g = 9.81\,\mathrm{m\,s^{-2}}$
speed of light in free space	$c = 3.00 \times 10^{8}\,\mathrm{m\,s^{-1}}$
elementary charge	$e = 1.60 \times 10^{-19}\,\mathrm{C}$
unified atomic mass unit	$1\,\mathrm{u} = 1.66 \times 10^{-27}\,\mathrm{kg}$
rest mass of proton	$m_p = 1.67 \times 10^{-27}\,\mathrm{kg}$
rest mass of electron	$m_e = 9.11 \times 10^{-31}\,\mathrm{kg}$
Avogadro constant	$N_A = 6.02 \times 10^{23}\,\mathrm{mol^{-1}}$
molar gas constant	$R = 8.31\,\mathrm{J\,K^{-1}\,mol^{-1}}$
Boltzmann constant	$k = 1.38 \times 10^{-23}\,\mathrm{J\,K^{-1}}$
gravitational constant	$G = 6.67 \times 10^{-11}\,\mathrm{N\,m^{2}\,kg^{-2}}$
permittivity of free space	$\varepsilon_0 = 8.85 \times 10^{-12}\,\mathrm{F\,m^{-1}}$ $\left(\frac{1}{4\pi\varepsilon_0} = 8.99 \times 10^{9}\,\mathrm{m\,F^{-1}}\right)$
Planck constant	$h = 6.63 \times 10^{-34}\,\mathrm{J\,s}$
Stefan–Boltzmann constant	$\sigma = 5.67 \times 10^{-8}\,\mathrm{W\,m^{-2}\,K^{-4}}$

Formulae

uniformly accelerated motion	$s = ut + \frac{1}{2}at^2$ $v^2 = u^2 + 2as$
hydrostatic pressure	$\Delta p = \rho g \Delta h$
upthrust	$F = \rho g V$
Doppler effect for sound waves	$f_o = \frac{f_s v}{v \pm v_s}$
electric current	$I = Anvq$
resistors in series	$R = R_1 + R_2 + \ldots$
resistors in parallel	$\frac{1}{R} = \frac{1}{R_1} + \frac{1}{R_2} + \ldots$